메가텍 자동밸브

MEGATEC

Pneumatic Actuator

AT Series

Company Introduction

메가텍은 하이테크 기업 제조, 마케팅, 연구 및 자동 제어 밸브를 개발에 전념하고 있습니다.

메가텍은 Pneumatic Angle Seat Valve, Pneumatic Actuator , Electric Actuator , Pneumatic Valve, Electric Valve 및 모든 제품을 ISO 9001, CE 등 인증획득 하였습니다.

메가텍은 과학 기술 우선, 품질 기반 테스트 장비를 개선하고 제품 성능을 보장하기 위해 R & D 팀을 구성하였습니다.

제품생산은 ISO 9001 국제 품질 표준 시스템에 획득으로 엄격하게 관리합니다.

CNC 머시닝 센터, 수치 제어 기계 가공 머시닝 및 CAD R & D 및 CIMS 컴퓨터 네트워크 관리 시스템을 갖추고 있습니다.

각 생산 절차는 ISO, DIN, 3A, SMS, JIS 및 GB 표준을 엄격히 준수하여 제품 품질을 보장합니다.

메가텍 제품은 천연 가스, 석유, 제지, 염색, 인쇄, 유제품, 의약품, 화학, 식품, 환경 보호, 수처리, 화장품 등의 분야에 널리 응용됩니다.

메가텍은 항상 유체 제어 장비 제품을 개발 및 제조하는 데 전념하고 있습니다.

또 국제적인 최첨단 기술에 의거하여 지속적으로 신제품을 출시하고 있습니다.

메가텍은 세계적 수준의 브랜드로 KST KOREA를 구축하기 위해 기술, 가용성, 신뢰성 및 서비스를 중요하게 생각합니다.

메가텍은 시대에 발 맞추어 기술, 생산 및 거래와 통합 된 국제적인 기업으로 만들기 위해 계속 노력하고 있습니다.

Description And Model Preparation ATD/ATS32-400

ATD / ATS Series Pneumatic Actuator

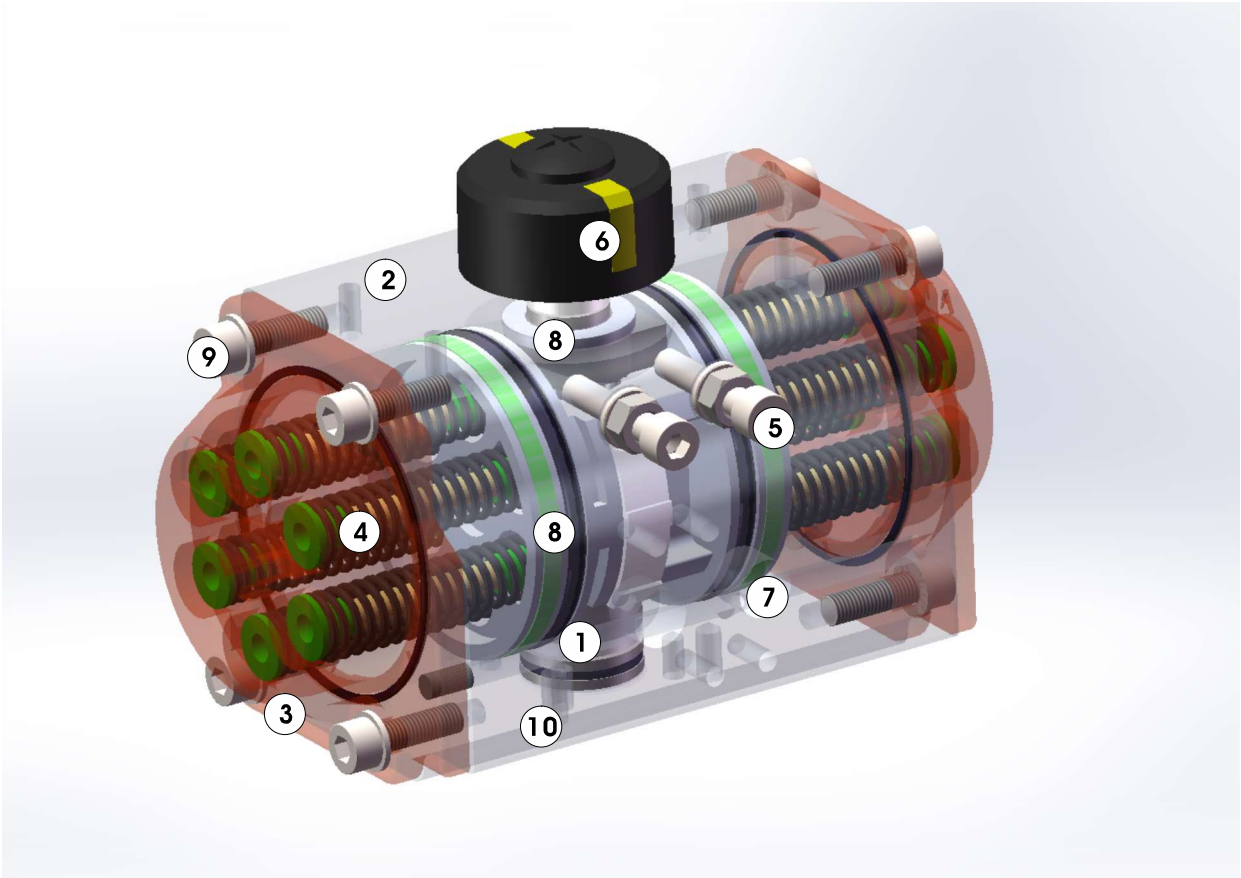

ATD/ATS new rack and pinion pneumatic actuator by the zhejiang KST company combines the latest technology at home and abroad, through the three-dimensional model of innovation and optimization of CAD design, beautiful shape compact, modern styling; and adopt practical new materials, new processes, so that the product quality, more reliable; more standard selection of more affordable; products fully meet the latest international standards, technical specifications, to meet current and future needs.

①Dual piston rack and pinion design of symmetric structures, rapid and smooth movement, high precision, high output power by a simple change in the direction of the piston assembly positions available anti-rotation.

②High quality extruded aluminum alloy cylinder block, by precision machining the hole and the external surface of hard anodized (anodic oxidation under special circumstances + Teflon coating), longer life, low friction coefficient.

③Integrated design, all the double acting and single-function actuator models have the same cylinder and end caps, easily removed by installing a spring or spring to change the mode of action.

④Combined pre-spring break Hean whole group, whether in the assembly process or use on-site in both convenient and safe to install or change the

⑤The external side of the two single independent adjustment screw has been number of springs. installed in the valve for the actuator is precisely to facilitate, control valve open and valve closed position, For the whole trip conditioned office is also configured in two cover a longer adjustment screws.

⑥Multi-position indicator, on-site visual instructions, consistent with VDI/VDE3845, NAMUR standard slot, the output can be installed and all the accessories, such as limit switch box, electric positioner, position sensor (Pepperl and Fuchs, Turck).

⑦Gas source interface line NAMURstandard, direct safety plaquesNAMUR standard solenoid valve.

⑧Rack on the back of the composite bearing and piston guide ring and the output shaft bearings to prevent metal on metal friction and increasing lubrication, so a low friction, long life.

⑨All fasteners are stainless steel, long-term corrosion resistance.

⑩Connection part of the line with new international standard ISO5211, DIN3337 (F03-F25) makes products with interchangeable, versatile.

Model Preparation

AT-160 S-K10 F10/12 P27-90-B-A

⑨. Corrosion Resistance Grade: A,B

⑧. Ambient Temp.: Standard-B, Low Temp.: D, High Temp.: G

⑦. Rotation Angle：0°~90°,0°~120°,0°~180°,3 Position,0°~45°~90°

⑥. Shaft Size Code: P-Star Square, H-Parallel Opposite Hole, W Two Key Hole

⑤. Connection: ISO5211 Standard, Flange Size, F03-F25, Star Square, 9-55

④. Spring QTY: K5/K6/K7/K8/K9/K10/K11/K12/K13/K14/K15/K16, Not Available for Double Acting

③. Type: D-Double Acting, S-Spring Return

②. 32~300 Cylinder Size: 32~400

①. AT Series Pneumatic Actuator

Components And Materials, Corrosion

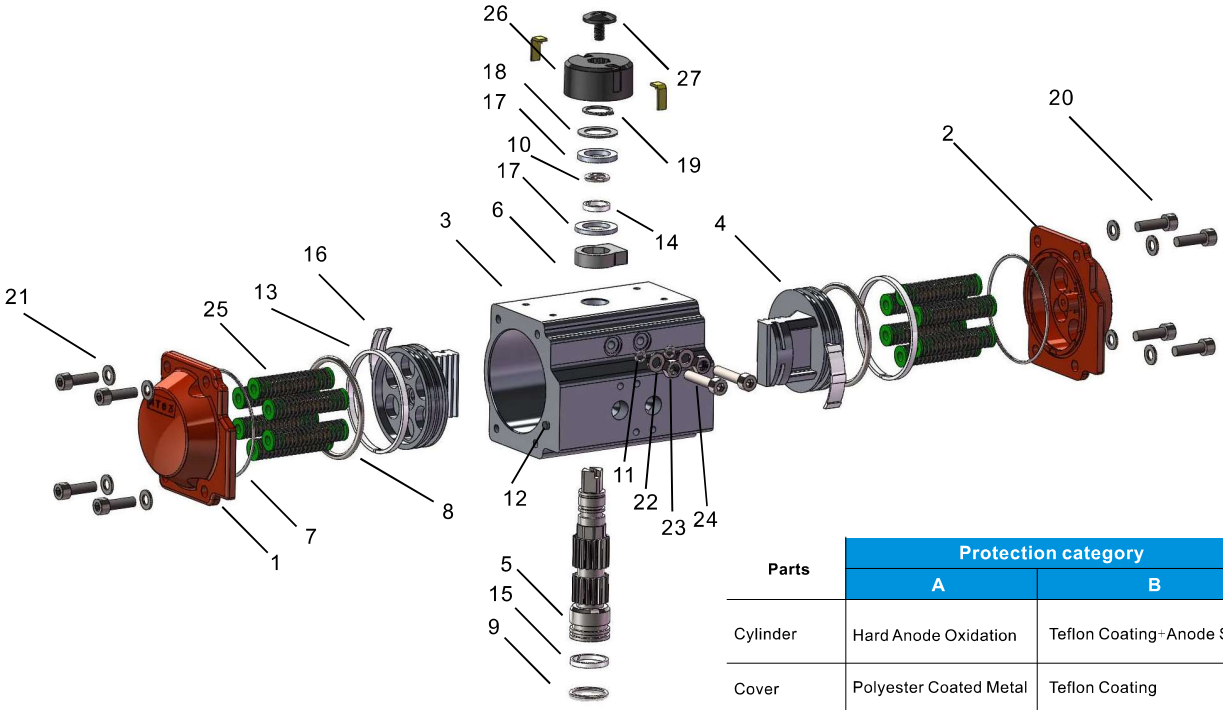

Parts	Protection category	
	A	B
Cylinder	Hard Anode Oxidation	Teflon Coating+Anode Sclerosis
Cover	Polyester Coated Metal	Teflon Coating
Output shaft	Carbon Steel Electroless Nickel Plating	Electroless Nickel Plating Or Stainless Steel
Use Occasion	General Situation	General Occasions Or Low Concentrations Of Acidic Environment

Part Number	Each number	Part Name	Standard Materials	Selected Materials
01	1	Left Cover	Aluminum Die Casting	Stainless steel
02	1	Right Cover	Aluminum Die Casting	Stainless steel
03	1	body	Aluminum extrusion	Stainless steel
04	2	Piston	Aluminum Die Casting	----
05	1	Output shaft	Carbon Steel	Stainless steel
06	1	Cam adjustment	Stainless steel	----
07 *	2	O-ring (cover)	NBR	Fluorine or silicone rubber
08 *	2	O-ring (Piston)	NBR	Fluorine or silicone rubber
09 *	1	O-ring (output shaft bottom)	NBR	Fluorine or silicone rubber
10 *	1	O-ring (output shaft at the top)	NBR	Fluorine or silicone rubber
11 *	2	O-ring (adjusting screw)	NBR	Fluorine or silicone rubber
12 *	2	Plug (Cylinder)	NBR	Fluorine or silicone rubber
13 *	2	Bearing (Piston)	POM	----
14 *	1	Bearing (output shaft at the top)	POM	----
15 *	1	Bearing (output shaft bottom)	POM	----
16 *	1	Guide with Bearing (Piston back)	POM	----
17 *	2	Thrust bearings (output shaft)	POM	----
18	2	Gasket (output shaft)	Stainless steel	----
19	1	Flexible file ring	Spring steel	----
20	8	Cover bolt	Stainless steel	----
21	8	Cover Gasket	Stainless steel	----
22	2	Gasket	Stainless steel	----
23	2	Nut	Stainless steel	----
24	2	Adjustment bolt	Stainless steel	----
25	5－16	Spring Components	Alloy spring steel	----
26	1	Position indicator	POM	----
27	1	Screw of indicator	POM	----

Torque Diagram

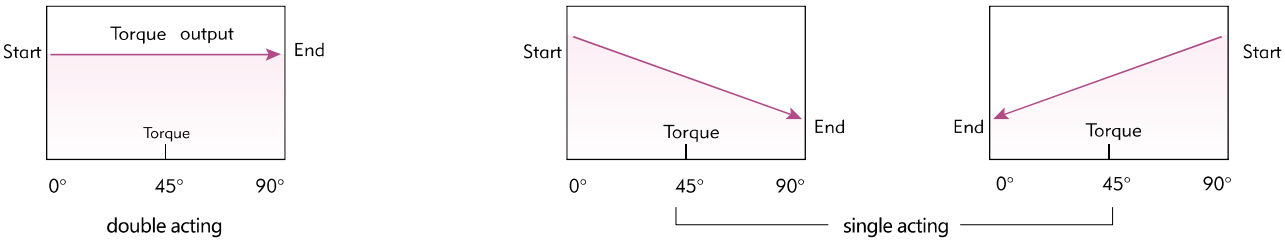

Double Acting Operation

Selection of double acting actuators
The suggested safety factor for double acting actuators under normal working conditions is 20%-30%

Example:
- The torque needed by valve=100 N.m
- The torque considered safety factor 100×（1+30%）=130 N.m
- Air Supply=5 Bar

According to double acting torque table, we can choose the minimum model is AT-125.

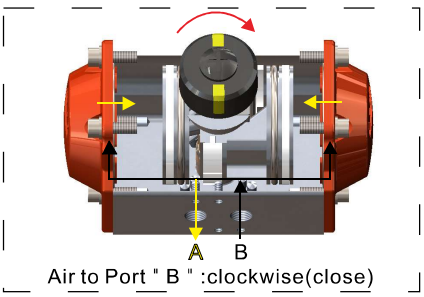

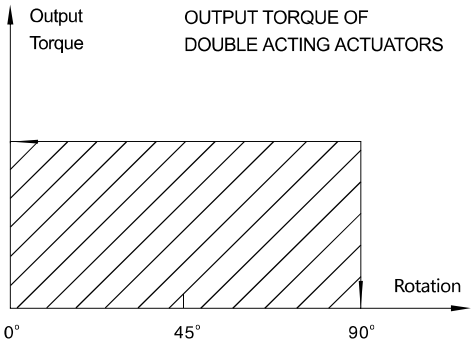

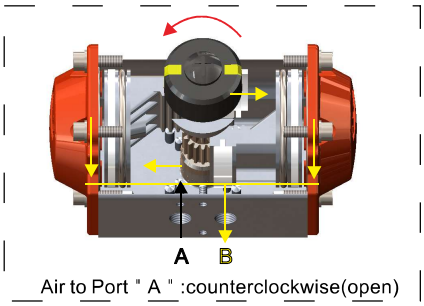

* Pistons must be inverted to reverse actuator rotation

Spring Return Operation Diagram

Selection of Spring Return Actuator

Suggested safety factor for spring return actuators under normal working condition is 30%-50%
For Example:
Required valve torque: 100N.m.
Safety Torque: 100*1.3=130N.m.
According to output torque table of spring return actuator, model AT145SK10 can be selected
Torque of AT145 is as following:
Air to Open 0°=324N.m.
End to Open 90°=212N.m.
Spring to Close 0°=197N.m.
End to Close 90°=310N.m.

All output torque is larger than needed.

Note: Air supply through port B will not affect the output torque of actuator during spring return. On the contrary, it will help spring return.

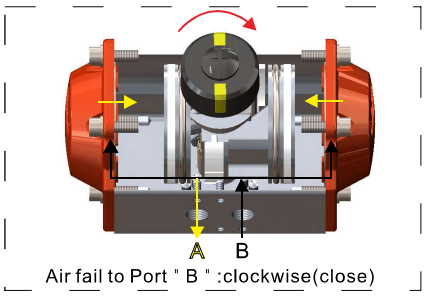

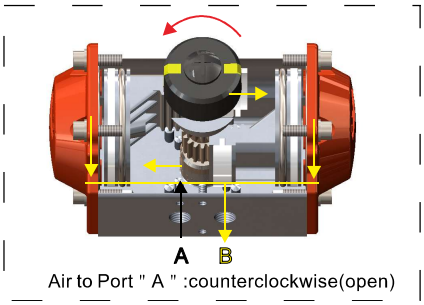

* Spring force makes the actuator clokwise when the air is exhausted at port " A "
* When air fail to counterclockwise is required, the pistons must be inverted

Double Acting Actuator Output Torque(Nm)

Model	Air Supply Pressure(Bar)									
	2.5	3	3.5	4	4.5	5	5.5	6	7	8
AT-32D	3.8	4.5	5.3	6.0	6.8	7.5	8.3	9.0	10.5	12.0
AT-50D	8.3	10.0	11.6	13.3	15.0	16.6	18.3	20.0	23.3	26.6
AT-63D	14.6	17.6	20.5	23.4	26.4	29.3	32.2	35.2	41.0	47.0
AT-75D	29.0	35.0	40.7	46.5	52.3	58.1	64.0	69.7	81.4	93.0
AT-88D	45.7	55.0	64.0	73.2	82.3	91.4	101	110	128	146
AT-100D	66.4	79.7	93.0	106	120	133	146	159	186	213
AT-115D	107	129	150	172	193	215	236	258	301	344
AT-125D	138	166	194	221	249	277	304	332	387	443
AT-145D	217	261	304	348	391	434	478	521	608	695
AT-160D	283	340	397	453	510	577	623	680	793	907
AT-190D	533	640	746	853	959	1066	1173	1279	1492	1706
AT-210D	651	781	911	1042	1172	1302	1432	1562	1823	2083
AT-240D	957	1148	1339	1530	1722	1913	2104	2296	2678	3061
AT-270D	1452	1743	2033	2324	2614	2905	3195	3486	4067	4648
AT-300D	1993	2391	2790	3188	3587	3985	4384	4782	5579	6376
AT-350D	2983	3580	4176	4773	5369	5966	6563	7159	8352	9546
AT-400D	4250	5100	5950	6800	7650	8500	9350	10200	11900	13600

Dimensional Drawing

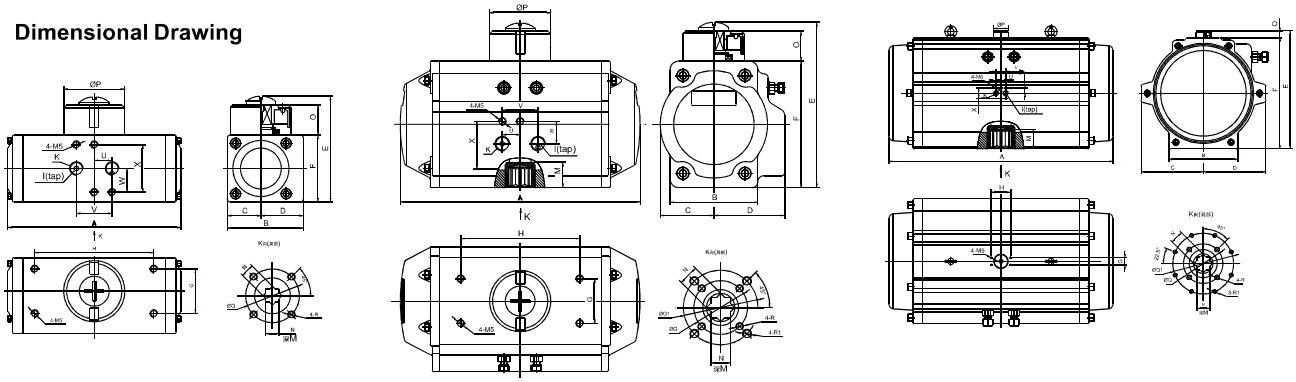

AT-32

AT-50,AT-63,AT-75,AT-88,AT-100,AT-115,AT-125,AT-145
AT-160,AT-190,AT-210,AT-240,AT-270,AT-300,AT-350

AT-400

Dimension

Unit (mm)

Model	FLANGE L(ISO5211) Q/Q1	R/R1 M/N(min)	A	B	C	D	E	F	G	H	I	K	O	P	U	V	W	X
AT-32	F03	M5	118	51	22.5	28.5	69	45	30	80	PF	1/8″	20	42	12	24	16	32
	Ø36	10/9																
AT-50	F03/F05	M5/M6	146	47	29	41.5	93	69	30	80	PF	1/4″	20	42	12	24	16	32
	Ø36/Ø50	13/11																
AT-63	F03/F05	M5/M6	163	59	36	47.5	111	85	30	80	PF	1/4″	20	42	12	24	16	32
	Ø36/Ø50	16/14																
AT-75	F05/F07	M6/M8	214	68	43	51	128	102	30	80	PF	1/4″	20	42	12	24	16	32
	Ø50/Ø70	19/17																
AT-88	F05/F07	M6/M8	252	68	49.5	55.5	141	115	30	80	PF	1/4″	20	42	12	24	16	32
	Ø50/Ø70	20/17																
AT-100	F07/F10	M8/M10	270	95	56	64	153	127	30	80	PF	1/4″	20	42	12	24	16	32
	Ø70/Ø102	24/22																
AT-115	F07/F10	M8/M10	316	97	64.5	74.5	180	145	30	80	PF	1/4″	30	62	12	24	16	32
	Ø70/Ø102	24/22																
AT-125	F07/F10	M8/M10	354	97	69	78.5	193	157	30	80	PF	1/4″	30	62	12	24	16	32
	Ø70/Ø102	29/27																
AT-145	F10/F12	M10/M12	418	115	80	87	214	178	30	80/130	PF	1/4″	30	62	12	24	16	32
	Ø102/Ø125	30/27																
AT-160	F10/F12	M10/M12	450	118	89	104	236	200	30	80/130	PF	1/4″	30	80	12	24	16	32
	Ø102/Ø125	30/27																
AT-190	F14	M16	552	130	103	103	268	231	30	80/130	PF	1/4″	30	80	12	24	16	32
	Ø140	40/36																
AT-210	F14	M16	556	130	113	113	293	257	30	130	PF	1/4″	30	80	12	24	16	32
	Ø140	40/36																
AT-240	F16	M20	630	160	130	130	328	292	30	130	PF	1/4″	30	80	12	24	16	32
	Ø165	50/46																
AT-270	F16	M20	750	160	147	147	367	331	30	130	PF	1/2″	30	80	20	40	22.5	45
	Ø165	50/46																
AT-300	F16	M20	772	180	161	172	390	354	30	130	PF	1/2″	30	90	20	40	22.5	45
	Ø165	50/46																
AT-350	F16/F25	M20/8-M16	860	270	190	190	346	410	30	130	PF	1/2"	30	90	20	40	22.5	45
	Ø165/Ø254	50/46																
AT-400	F16/F25	M20/8-M16	938	291	262	262	502	466	30	130	PF	1/2"	30	90	20	40	22.5	45
	Ø165/Ø254	72/55																

Single Acting Actuator Output Torque(Nm)

Air pressure		2.5bar		3bar		3.5bar		4bar		4.5 bar		5 bar		5.5 bar		6 bar		7 bar		8 bar		Spring Torque	
Model	Spring Q.ty	0°	90°	0°	90°	0°	90°	0°	90°	0°	90°	0°	90°	0°	90°	0°	90°	0°	90°	0°	90°	90°	0°
AT-50S	5	4.6	2.3	6.3	4	7.9	5.6	9.6	7.3	11.3	9	12.9	10.6									6	3.7
	6	3.9	1.1	5.6	2.8	7.2	4.4	8.9	6.1	10.6	7.8	12.2	9.4	13.9	11.1							7.2	4.4
	7			4.8	1.6	6.4	3.2	8.1	4.9	9.8	6.6	11.4	8.2	13.1	9.9	14.8	11.6					8.4	5.2
	8					5.7	2	7.4	3.7	9.1	5.4	10.7	7	12.4	8.7	14.1	10.4	17.4	13.7			9.6	5.9
	9							6.7	2.5	8.4	4.2	10	5.8	11.7	7.5	13.4	9.2	16.7	12.5	20	15.8	10.8	6.6
	10									7.6	3	9.2	4.6	10.9	6.3	12.6	8	15.9	11.3	19.2	14.6	12	7.4
	11											8.5	3.4	10.2	5.1	11.9	6.8	15.2	10.1	18.5	13.4	13.2	8.1
	12													9.4	3.9	11.1	5.6	14.4	8.9	17.7	12.2	14.4	8.9
AT-63S	5	8.1	4	11.1	7	14	9.9	16.9	12.8	19.9	15.8	22.8	18.7									10.6	6.5
	6	6.8	1.9	9.8	4.9	12.7	7.8	15.6	10.7	18.6	13.7	21.5	16.6	24.4	19.5							12.7	7.8
	7			8.5	2.8	11.4	5.7	14.3	8.6	17.3	11.6	20.2	14.5	23.1	17.4	26.1	20.4					14.8	9.1
	8					10.1	3.5	13	6.4	16	9.4	18.9	12.3	21.8	15.2	24.8	18.2	30.6	24			17	10.4
	9							11.7	4.4	14.7	7.4	17.6	10.3	20.5	13.2	23.5	16.2	29.3	22	35.3	28	19	11.7
	10									13.4	5.2	16.3	8.1	19.2	11	22.2	14	28	19.8	34	25.8	21.2	13
	11											15	6	17.9	8.9	20.9	11.9	26.7	17.7	32.7	23.7	23.3	14.3
	12													16.6	6.8	19.6	9.8	25.4	15.6	31.4	21.6	25.4	15.6
AT-75S	5	16.1	8	22.1	14	27.8	19.7	33.6	25.5	39.4	31.3	45.2	37.1									21	12.9
	6	13.5	3.8	19.5	9.8	25.2	15.5	31	21.3	36.8	27.1	42.6	32.9	48.5	38.8							25.2	15.5
	7			17	5.6	22.7	11.3	28.5	17.1	34.3	22.9	40.1	28.7	46	34.6	51.7	40.3					29.4	18
	8					20.1	7.1	25.9	12.9	31.7	18.7	37.5	24.5	43.4	30.4	49.1	36.1	60.8	47.8			33.6	20.6
	9							23.3	8.7	29.1	14.5	34.9	20.3	40.8	26.2	46.5	31.9	58.2	43.6	69.8	55.2	37.8	23.2
	10									26.5	10.3	32.3	16.1	38.2	22	43.9	27.7	55.6	39.4	67.2	51	42	25.8
	11											29.8	11.9	35.7	17.8	41.4	23.5	53.1	35.2	64.7	46.8	46.2	28.3
	12													33.1	13.6	38.8	19.3	50.5	31	62.1	42.6	50.4	30.9
AT-88S	5	25.5	12.7	34.8	22	43.8	31	53	40.2	62.1	49.3	71.2	58.4									33	20.2
	6	21.4	6.1	30.7	15.4	39.7	24.4	48.9	33.6	58	42.7	67.1	51.8	76.7	61.4							39.6	24.3
	7			26.7	8.7	35.7	17.7	44.9	26.9	54	36	63.1	45.1	72.7	54.7	81.7	63.7					46.3	28.3
	8					31.6	11.1	40.8	20.3	49.9	29.4	59	38.5	68.6	48.1	77.6	57.1	95.6	75.1			52.9	32.4
	9							36.8	13.7	45.9	22.8	55	31.9	64.6	41.5	73.6	50.5	91.6	68.5	110	86.5	59.5	36.4
	10									41.8	16.3	50.9	25.4	60.5	35	69.5	44	87.5	62	106	80	66	40.5
	11											46.9	18.7	56.5	28.3	65.5	37.3	83.5	55.3	102	73.3	72.7	44.5
	12													52.4	21.7	61.4	30.7	79.4	48.7	97.4	66.7	79.3	48.6
AT-100S	5	37	18.4	50.3	31.7	63.6	45	76.6	58	90.6	72	103.6	85									48	29.4
	6	31.1	8.7	44.4	22	57.7	35.3	70.7	48.3	84.7	62.3	97.7	75.3	111	88.3							57.7	35.3
	7			38.5	12.4	51.8	25.7	64.8	38.7	78.8	52.7	91.8	65.7	105	78.7	118	91.7					67.3	41.2
	8					46	16.1	59	29.1	73	43.1	86	56.1	99	69.1	112	82.1	139	109			76.9	47
	9							53	19.5	67	33.5	80	46.5	93	59.5	106	72.5	133	99.5	160	127	86.5	53
	10									61.1	24	74.1	37	87.1	50	100	63	127	90	154	117	96	58.9
	11											68.3	27	81.3	40	94.3	53	121	80	148	107	106	64.7
	12													75.4	31	88.4	44	115	71	142	98	115	70.6
AT-115S	5	59.4	29.3	81.4	51.3	102.4	72.3	124	94.3	145	115	167	137									77.7	47.6
	6	49.8	13.8	71.8	35.8	92.8	56.8	115	78.8	136	100	158	122	179	143							93.2	57.2
	7			62.3	20	83.3	41	105	63	126	84	148	106	169	127	191	149					109	66.7
	8					73.8	26	95.8	48	117	69	139	91	160	112	182	134	225	177			124	76.2
	9							86.3	32	107	53	129	75	150	96	172	118	215	161	258	204	140	85.7
	10									98	38	120	60	141	81	163	103	206	146	249	189	155	95.3
	11											110	44	131	65	153	87	196	130	239	173	171	105
	12													122	50	144	72	187	115	230	158	186	114
AT-125S	5	76.7	38	104.7	66	132.7	94	160	121	188	149	216	177									100	61.3
	6	64.4	18	92.4	46	120.4	74	147	101	175	129	203	157	230	184							120	73.6
	7			80.2	26	108.2	54	135	81	163	109	191	137	218	164	246	192					140	85.8
	8					96	34	123	61	151	89	179	117	206	144	234	172	289	227			160	98
	9							111	41	139	69	167	97	194	124	222	152	277	207	333	263	180	110
	10									126	49	154	77	181	104	209	132	264	187	320	243	200	123
	11											142	57	169	84	197	112	252	167	308	223	220	135
	12													157	64	185	92	240	147	296	203	240	147
AT-145S	5	120.7	60	164.7	104	207.7	147	252	191	295	234	338	277									157	96.3
	6	101	29	145	73	188	116	232	160	275	203	318	246	362	290							188	116
	7			126	41	169	84	213	128	256	171	299	214	343	258	386	301					220	135
	8					150	53	194	97	237	140	280	183	324	227	367	270	454	357			251	154
	9							175	65	218	108	261	151	305	195	348	238	435	325	522	412	283	173
	10									198	77	241	120	285	164	328	207	415	294	502	381	314	193
	11											222	88	266	132	309	175	396	262	483	349	346	212
	12													247	101	290	144	377	231	464	318	377	231
AT-160S	5	158	78	215	135	272	192	328	248	385	305	452	372									205	125
	6	133	37	190	94	247	151	303	207	360	264	427	331	473	377							246	150
	7			164	53	221	110	277	166	334	223	401	290	447	336	504	393					287	176
	8					197	69	253	125	310	182	377	249	423	295	480	352	593	465			328	200
	9							227	84	284	141	351	208	397	254	454	311	567	424	681	538	369	226
	10									259	100	326	167	372	213	429	270	542	383	656	497	410	251
	11											301	127	347	173	404	230	517	343	631	457	450	276
	12													322	131	379	188	492	301	606	415	492	301
AT-190S	5	333	224	440	331	546	437	653	544	759	650	866	757									309	200
	6	293	162	400	269	506	375	613	482	719	588	826	695	933	802							371	240
	7			360	207	466	313	573	420	679	526	786	633	893	740	999	740					433	280
	8					426	251	533	358	639	464	746	571	853	678	959	678	1172	997			495	320
	9							493	296	599	402	706	509	813	616	919	616	1132	935	1346	1149	557	360
	10									559	341	666	448	773	555	879	555	1092	874	1306	1088	618	400
	11											626	386	733	493	839	493	1052	812	1266	1026	680	440
	12													693	431	799	431	1012	750	1226	964	742	480
AT-210S	5	376	271	506	401	636	531	767	662	897	792	1027	922									380	275
	6	321	195	451	325	581	455	712	586	842	716	972	846	1102	976							456	330
	7			396	249	526	379	657	510	787	640	917	770	1047	900	1177	900					532	385
	8					471	303	602	434	732	564	862	694	992	824	1122	824	1383	1215			608	440
	9							547	358	677	488	807	618	937	748	1067	748	1328	1139	1588	1399	684	495
	10									622	412	752	542	882	672	1012	672	1273	1063	1533	1323	760	550
	11											697	466	827	596	957	596	1218	987	1478	1247	836	605
	12													772	520	902	520	1163	911	1423	1171	912	660
AT-240S	5	547	403	738	594	929	785	1120	976	1312	1168	1503	1359									554	410
	6	465	292	656	483	847	674	1038	865	1230	1057	1421	1248	1612	1439							665	492
	7			573	373	764	564	955	755	1147	947	1338	1138	1529	1329	1721	1329					775	575
	8					683	453	874	644	1066	836	1257	1027	1448	1218	1640	1218	2022	1792			886	656
	9							791	532	983	724	1174	915	1365	1106	1557	1106	1939	1680	2322	2063	998	739
	10									901	614	1092	805	1283	996	1475	996	1857	1570	2240	1953	1108	821
	11											1010	694	1201	885	1393	885	1775	1459	2158	1842	1219	903
	12													1119	774	1311	774	1693	1348	2076	1731	1330	985
AT-270S	5	892	665	1183	956	1473	1246	1764	1537	2054	1827	2345	2118									787	560
	6	780	509	1071	800	1361	1090	1652	1381	1942	1671	2233	1962	2523	2252							943	672
	7			960	642	1250	932	1541	1223	1831	1513	2122	1804	2412	2094	2703	2094					1101	783
	8					1138	775	1429	1066	1719	1356	2010	1647	2300	1937	2591	1937	3172	2809			1258	895
	9							1317	908	1607	1198	1898	1489	2188	1779	2479	1779	3060	2651	3641	3232	1416	1007
	10									1495	1042	1786	1333	2076	1623	2367	1623	2948	2495	3529	3076	1572	1119
	11											1674	1175	1964	1465	2255	1465	2836	2337	3417	2918	1730	1231
	12													1853	1308	2144	1308	2725	2180	3306	2761	1887	1342
AT-300S	5	1263	932	1661	1330	2060	1729	2458	2127	2857	2526	3255	2924									1061	730
	6	1117	720	1515	1118	1914	1517	2312	1915	2711	2314	3109	2712	3508	3111							1273	876
	7			1369	906	1768	1305	2166	1703	2565	2102	2963	2500	3362	2899	3760	2899					1485	1022
	8					1622	1093	2020	1491	2419	1890	2817	2288	3216	2687	3614	2687	4411	3882			1697	1168
	9							1874	1279	2273	1678	2671	2076	3070	2475	3468	2475	4265	3670	5062	4467	1909	1314
	10									2127	1465	2525	1863	2924	2262	3322	2262	4119	3457	4916	4254	2122	1460
	11											2379	1651	2778	2050	3176	2050	3973	3245	4770	4042	2334	1606
	12													2632	1838	3030	1838	3827	3033	4624	3830	2546	1752
AT-350S	5	1810	1281	2407	1878	3003	2474	3600	3071	4196	3667	4793	4264									1702	1173
	6	1575	940	2172	1537	2768	2133	3365	2730	3961	3326	4558	3923	5155	4520							2043	1408
	7			1938	1197	2534	1793	3131	2390	3727	2986	4324	3583	4921	4180	5517	4180					2383	1642
	8					2299	1452	2896	2049	3492	2645	4089	3242	4686	3839	5282	3839	6475	5628			2724	1877
	9							2661	1709	3257	2305	3854	2902	4451	3499	5047	3499	6240	5288	7434	6482	3064	2112
	10									3023	1964	3620	2561	4217	3158	4813	3158	6006	4947	7200	6141	3405	2346
	11											3385	2221	3982	2818	4578	2818	5771	4607	6965	5801	3745	2581
	12													3747	2477	4343	2477	5536	4266	6730	5460	4086	2816
AT-400S	7	2413	1370	3263	2220	4113	3070	4963	3920	5813	4770	6663	5620									2880	1837
	8	2150	958	3000	1808	3850	2658	4700	3508	5550	4358	6400	5208	7250	6058							3292	2100
	9	1888	547	2738	1397	3588	2247	4438	3097	5288	3947	6138	4797	6988	5647	7838	5647					3703	2362
	10	1626	135	2476	985	3326	1835	4176	2685	5026	3535	5876	4385	6726	5235	7576	5235	9276	7785			4115	2624
	11			2213	574	3063	1424	3913	2274	4763	3124	5613	3974	6463	4824	7313	4824	9013	7374	10713	9074	4526	2887
	12					2801	1012	3651	1862	4501	2712	5351	3562	6201	4412	7051	4412	8751	6962	10451	8662	4938	3149
	13							3388	1451	4238	2301	5088	3151	5938	4001	6788	4001	8488	6551	10188	8251	5349	3412
	14									3976	1889	4826	2739	5676	3589	6526	3589	8226	6139	9926	7839	5761	3674
	15											4563	2328	5413	3178	6263	3178	7963	5728	9663	7428	6172	3937
	16													5151	2766	6001	2766	7701	5316	9401	7016	6584	4199

Sizing information and How to order

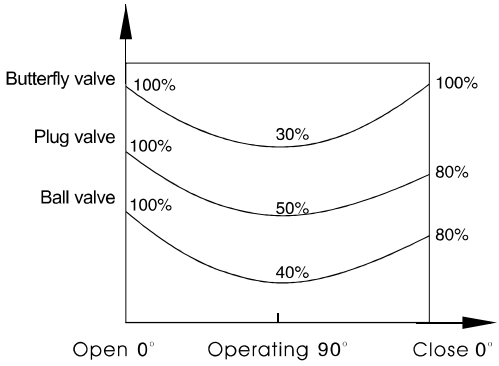

For Example:
Max. Butterfly Valve Torque: 80N.m.
Open Torque 80*30%=24N.m.
Air Pressure: 6 bar

We can choose AT115S
Air to Open 0°=159N.m.>80N.m.
End to Open 90°=101N.m.>24N.m.
Spring to Close 90°=157N.m.>24N.m.
End to Close0°=98N.m.>80N.m.

Figures above show normal opening of butterfly valve can be satisfied.

Operating type (Double acting and spring return)

Air supply connection is designed in accordance with NAMUR Standard to install solenoid valves.

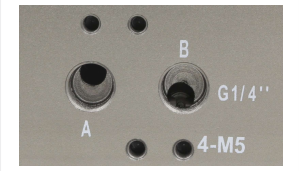

The Namur drive pinion and the Namur top mounting connection permit direct installation of accessories such as limitswitch box and positioner.

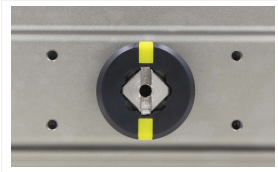

Bottom mounting connection is designed in accordance with ISO5211、DIN3337standards for direct mounting with valve gear boxes or mounting brackets.

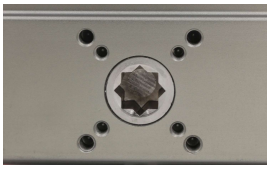

Operating conditions:

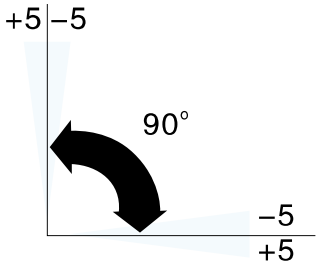

1.Operating media
Dry or lubricated air, or the non-corrosive gases
The maximum particle diameter must less than 30 μm

2.Air supply pressure
The minximum supply pressure is 2.5 Bar
The maximum supply pressure is 8 Bar

3.Operating temperature
Standard：-20℃~+80℃
Low temperature：-35℃％~+80℃
High temperature：-15℃~+150℃

4.Travel adjustment
Have adjustment range of ±5° for the rotation at 0°and 90°

5.Application
Either indoor or outdoor

Air Consumption

Air Consumption

Model	Max. Pressure	Rotation Angle	Temp.	Lap No. For Each 1 Degree Stroke	Diameter	Cylinder Volume Close	Cylinder Volume Open	Open/Close Time Close	Open/Close Time Open	Weight	
AT-50S	Lubrication or dry of compressed air 8bar	(0°-90°) ± 5° or full itinerary 0°-90°	B (normal) NBR O-ring -20-+80℃ G(High Temperature) Viton O-ring -15-+150℃ D(Low Temperature) Silicone O-ring -40+80℃	1/6	50	0.1	0.2	DA 0.6 SR 2.0	DA 0.6 SR 0.5	DA 1.10 SR 1.15	... 0.010
AT-63S				1/6	63	0.2	0.3	DA 0.7 SR 2.0	DA 0.7 SR 1.0	DA 1.62 SR 1.80	... 0.015
AT-75S				1/5	75	0.3	0.5	DA 0.8 SR 2.0	DA 0.7 SR 1.0	DA 2.75 SR 3.15	... 0.036
AT-88S				1/5	88	0.5	0.8	DA 0.9 SR 2.5	DA 0.8 SR 1.0	DA 3.80 SR 4.40	... 0.046
AT-100S				1/5	100	0.7	1.1	DA 1.0 SR 3.0	DA 1.0 SR 1.0	DA 5.20 SR 5.95	... 0.050
AT-115S				1/4	115	1.2	1.8	DA 1.5 SR 3.0	DA 1.5 SR 1.0	DA 7.85 SR 9.05	... 0.094
AT-125S				1/4	125	1.5	2.3	DA 2.0 SR 4.0	DA 2.0 SR 1.0	DA 10.00 SR 12.00	... 0.150
AT-145S				1/4	145	2.4	3.8	DA 2.5 SR 4.0	DA 2.5 SR 1.0	DA 14.70 SR 17.20	... 0.200
AT-160S				1/4	160	3.1	4.9	DA 4.0 SR 4.0	DA 3.0 SR 1.5	DA 20.85 SR 24.45	... 0.300
AT-190S				1/4	190	4.5	7.3	DA 5.0 SR 5.0	DA 4.0 SR 3.0	DA 31.05 SR 36.80	... 0.479
AT-210S				1/4	210	6.8	11.2	DA 5.0 SR 6.0	DA 5.0 SR 3.0	DA 39.00 SR 45.50	... 0.500
AT-240S				1/4	240	10	15.2	DA 6.0 SR 12	DA 6.0 SR 4.0	DA 53.00 SR 64.00	... 0.917
AT-270S				1/4	270	14.5	21.4	DA 8.0 SR 15	DA 8.0 SR 6.0	DA 76.00 SR 95.20	... 1.600
AT-300S				1/4	300	23.8	29.7	DA 12 SR 18	DA 12 SR 8.0	DA 100.0 SR 128.2	... 2.350
AT-350S				1/4	350	35.1	46	DA 14 SR 20	DA 14 SR 10	DA 186.0 SR 216.0	... 2.501
AT-400S				1/4	400	52.6	56	DA 15 SR 25	DA 15 SR 12	DA 243.0 SR 279.0	... 3.001

Air consumption is dependent on air supply pressure, open-close stroke, volume and motion times, which is calculated as following:

L/Min=Air Volume (Opening Volume+Closing Volume)*Air Supply Pressure (Kpa) +101.3/101.3 *Motion Times (Min.)

Common Faults, Inspection and Troubleshooting

Failure phenomenon	Inspection Items	Solution
Pneumatic valve can not move	1.When solenoid valve is normal, coil is burned or not, or whether solenoid valve core is blocked by foreign matter.	Replace solenoid valve and coils and remove foreign matter
	2.Test the pneumatic actuator seperately with air supply, check whether sealing ring and cylinder is damaged.	Replace the damaged sealing ring and cylinder
	3.Impurities in the valve blocks the valve core.	Remove impurities and replace damaged parts
	4.The handle is in manual position.	Move the handle to pneumatic position
Slow motion, crawling	1.Air supply pressure is not enough.	Increase air supply pressure (0.4-0.7Mpa)
	2.Output torque of pneumatic actuator is too small.	Choose a larger pneumatic actuator model
	3.Valve coil or other valve components are too tight.	Reassemble and readjustments
	4.Air supply pipe is pluged and flow is too small.	Clear the plug and replace the filter
Reply devices without signal	1.Short circuit or disconnection of power occurs.	Inspect and repair power circuit
	2.Cam position inside the switch box is not accurate.	Adjust the cam to correct position
	3.Micro switches is damaged.	Replace micro switches

RT Series Stainless Steel Pneumatic Actuator

Designing Features

1.ASTM316L、316、304、303 stainless steel pneumatic actuator with electro-polish finish offer excellent resistance to most corrosive chemicals as well as industrial atmospheres.

2.Dual piston rack and pinion design for compact construction, symmetric mounting position, high-cycle life and fast operation, reverse rotation can be accomplished in the field by simply inverting the pistons.

3.Multiple bearings and guides on racks and pistons, low friction, high cycle life and prevent shaft blowout.

4.Modular preloaded spring cartridge design, with coated spring for simple versatile range, greater safely and corrosion resistance, longer cycle life.

5.Fully machined teeth on piston and pinion for accurate low backlash rack and pinion engagement, maximum efficiency.

6.Stainless steel fasteners for long term corrosion resistance.

7.Full conformance to the latest specifications: ISO5211, DIN 3337 and Namur or product interchangeability and easy mounting of solenoids, limit switches and other accessories.

RT Series Actuators Parts and Material Table

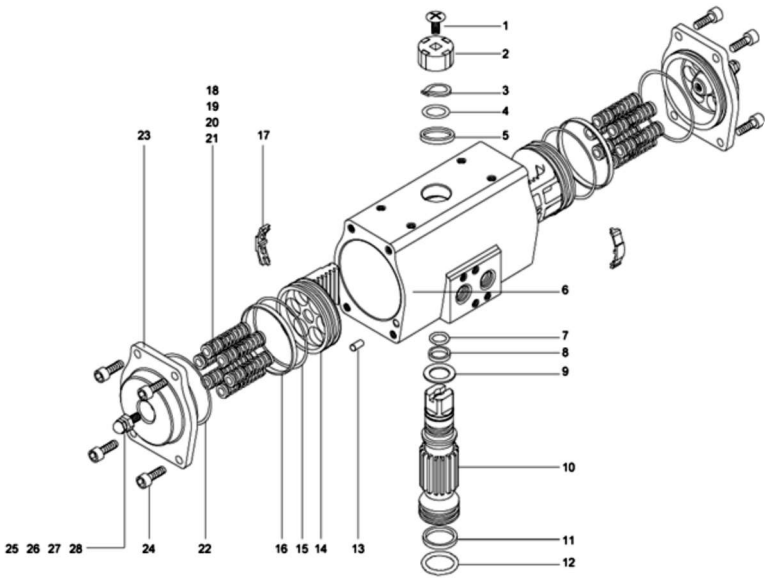

Number	Description	Qty	Standards Material
1	Indicator screw	1	POM
2	Indi cator	1	POM
3	Snap ring	1	Spring steel
4	Washer	1	Stainless stell
5	Trust bearing	1	POM
6	Body	1	Stainless steel
7	O-ring(top)	1	Viton/NBR
8	Bearing top	1	POM
9	Trust bearing	1	POM
10	Pinion	1	Stainless steel
11	Bearing bottom	1	POM
12	O-ring Bottom	1	Viton/NBR
13	Plug	2	NBR
14	Piston	2	Stainless steel
15	Piston O-ring	2	Viton/NBR
16	Piston Bearing	2	POM
17	Guide Piston	2	POM
18	Spring	*	Spring Steel
19	Spring Retainer(L)	*	Nylon 66
20	Spring Retainer(R)	*	Nylon 66
21	Retainer Connector	*	Brass
22	End-Cap O-ring	2	Viton/NBR
23	End-Cap	2	Stainless steel
24	End-Cap Stop Screw	8	Stainless steel
25	Adjust Screw	2	Stainless steel
26	Adjust Screw Nut	2	Stainless steel
27	Adjust Screw Washer	2	Stainless steel
28	Adjust Screw O-ring	2	Viton/NBR

RT Series Actuators Parts and Material Table

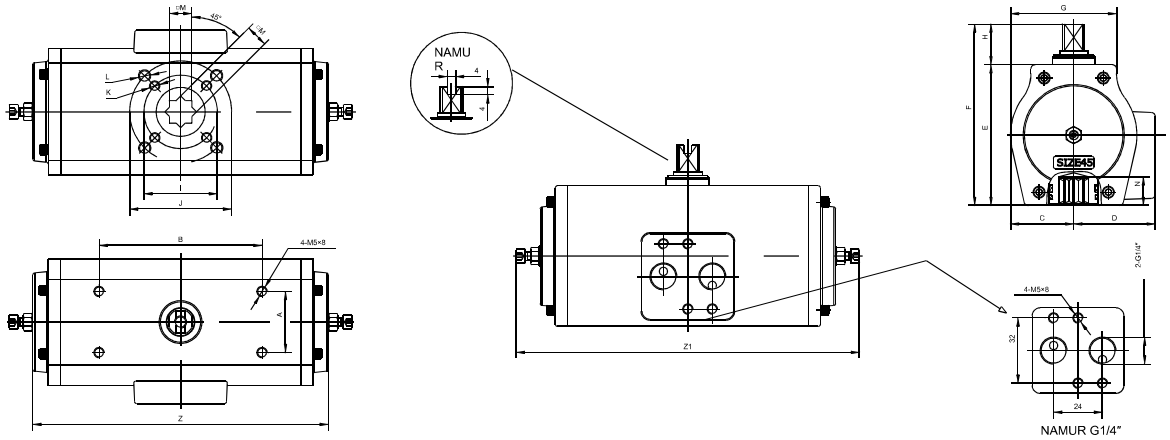

RT Series Pneumatic Actuator Dimension

Model	A	B	C	D	E	F	G	H	I	J	K	L	M	N	Z	Z1	Air
RT-45	30	80	31	39	68	88	52	20	36	50	M5×7	M6×8	11	14	145	165	1/4"NPT
RT-60	30	80	38	47	84	104	64	20	36	50	M5×8	M6×10	14	15.5	165	185	1/4"NPT
RT-85	30	80	49.5	53	107	127	76.5	20	50	70	M6×10	M8×12	17	20	200		1/4"NPT
RT-105	30	80	58	63.5	134	154	88	20	70	102	M8×13	M10×16	22	26	252		1/4"NPT
RT-125	30	130	69	68.5	157	187	100.5	30	70	102	M8×13	M10×16	22	29	338		1/4"NPT
RT-140	30	130	79.5	80	178	208	122	30	102	125	M10×16	M12×20	27	30	393		1/4"NPT
RT-160	30	130	90	90	200	230	146	30	102	125	M10×18	M12×18	27	30	442	475	1/4"NPT
RT-210	30	130	122	110	257	287	184	30		140		M16×20	36	40	596	628	1/4"NPT

RT Double Acting Actuator Output Torque (Nm)

Model	Air Supply Pressure(Bar)									
	2.5	3	3.5	4	4.5	5	5.5	6	7	8
RT-45D	8.3	10.0	11.6	13.3	15.0	16.6	18.3	20.0	23.3	26.6
RT-60D	14.6	17.6	20.5	23.4	26.4	29.3	32.2	35.2	41.0	47.0
RT-85D	43.3	52.0	60.7	69.3	78.0	86.7	95.3	104	121	139
RT-105D	81.4	97.6	114	130	146	163	179	195	228	260
RT-125D	138	166	194	221	249	277	304	332	387	443
RT-140D	217	261	304	348	391	434	478	521	608	695
RT-160D	283	340	397	453	510	577	623	680	793	907
RT-210D	683	820	957	1093	1230	1367	1503	1640	1913	2187

RT Single Acting Actuator Output Torque(Nm)

Air pressure		2.5bar		3bar		3.5bar		4bar		4.5 bar		5 bar		5.5 bar		6 bar		7 bar		8 bar		Spring Torque	
Model	Spring Q.ty	0°	90°	0°	90°	0°	90°	0°	90°	0°	90°	0°	90°	0°	90°	0°	90°	0°	90°	0°	90°	90°	0°
RT45S	5	4.6	2.3	6.3	4	7.9	5.6	9.6	7.3	11.3	9	12.9	10.6									6	3.7
	6	3.9	1.1	5.6	2.8	7.2	4.4	8.9	6.1	10.6	7.8	12.2	9.4	13.9	11.1							7.2	4.4
	7			4.8	1.6	6.4	3.2	8.1	4.9	9.8	6.6	11.4	8.2	13.1	9.9	14.8	11.6					8.4	5.2
	8					5.7	2	7.4	3.7	9.1	5.4	10.7	7	12.4	8.7	14.1	10.4					9.6	5.9
	9							6.7	2.5	8.4	4.2	10	5.8	11.7	7.5	13.4	9.2	17.4	13.7			10.8	6.6
	10									7.6	3	9.2	4.6	10.9	6.3	12.6	8	16.7	12.5	20	15.8	12	7.4
	11											8.5	3.4	10.2	5.1	11.9	6.8	15.9	11.3	19.2	14.6	13.2	8.1
	12													9.4	3.9	11.1	5.6	15.2	10.1	18.5	13.4	14.4	8.9
RT60S	5	8.1	4	11.1	7	14	9.9	16.9	12.8	19.9	15.8	22.8	18.7									10.6	6.5
	6	6.8	1.9	9.8	4.9	12.7	7.8	15.6	10.7	18.6	13.7	21.5	16.6	24.4	19.5							12.7	7.8
	7			8.5	2.8	11.4	5.7	14.3	8.6	17.3	11.6	20.2	14.5	23.1	17.4	26.1	20.4					14.8	9.1
	8					10.1	3.5	13	6.4	16	9.4	18.9	12.3	21.8	15.2	24.8	18.2					17	10.4
	9							11.7	4.4	14.7	7.4	17.6	10.3	20.5	13.2	23.5	16.2	30.6	24			19	11.7
	10									13.4	5.2	16.3	8.1	19.2	11	22.2	14	29.3	22	35.3	28	21.2	13
	11											15	6	17.9	8.9	20.9	11.9	28	19.8	34	25.8	23.3	14.3
	12													16.6	6.8	19.6	9.8	26.7	17.7	32.7	23.7	25.4	15.6
RT85S	5	27.5	20.3	36.2	29	44.9	37.7	53.5	46.3	62.2	55	70.9	63.7									23	15.8
	6	24.3	15.7	33	24.4	41.7	33.1	50.3	41.7	59	50.4	67.7	59.1	76.3	67.7							27.6	19
	7			29.9	19.8	38.6	28.5	47.2	37.1	55.9	45.8	64.6	54.5	73.2	63.1	81.9	71.8					32.2	22.1
	8					35.4	23.9	44	32.5	52.7	41.2	61.4	49.9	70	58.5	78.7	67.2	95.7	84.2			36.8	25.3
	9							40.8	27.9	49.5	36.6	58.2	45.3	66.8	53.9	75.5	62.6	92.5	79.6	110.5	97.6	41.4	28.5
	10									46.4	32	55.1	40.7	63.7	49.3	72.4	58	89.4	75	107.4	93	46	31.6
	11											51.9	36.1	60.5	44.7	69.2	53.4	86.2	70.4	104.2	88.4	50.6	34.8
	12													57.3	40.1	66	48.8	83	65.8	101	83.8	55.2	38
RT105S	5	49.8	32.2	66	48.4	82.4	64.8	98.4	80.8	114.4	96.8	131.4	113.8									49.2	31.6
	6	43.4	22.3	59.6	38.5	76	54.9	92	70.9	108	86.9	125	103.9	141	119.9							59.1	38
	7			53.3	28.7	69.7	45.1	85.7	61.1	101.7	77.1	118.7	94.1	135	110.1	150.7	126.1					68.9	44.3
	8					63.4	35.3	79.4	51.3	95.4	67.3	112.4	84.3	128.4	100.3	144.4	116.3	177.4	149.3			78.7	50.6
	9							73.1	41.4	89.1	57.4	106.1	74.4	122.1	90.4	138.1	106.4	171.1	139.4	203.1	171.4	88.6	56.9
	10									82.7	47.6	99.7	64.6	115.7	80.6	131.7	96.6	164.7	129.6	196.7	161.6	98.4	63.3
	11											93.4	54.7	109.4	70.7	125.4	86.7	158.4	119.7	190.4	151.7	108.3	69.6
	12													103.1	60.9	119.1	76.9	152.1	109.9	184.1	141.9	118.1	75.9
RT125S	5	76.7	38	104.7	66	132.7	94	160	121	188	149	216	177									100	61.3
	6	64.4	18	92.4	46	120.4	74	147	101	175	129	203	157	230	184							120	73.6
	7			80.2	26	108.2	54	135	81	163	109	191	137	218	164	246	192					140	85.8
	8					96	34	123	61	151	89	179	117	206	144	234	172	289	227			160	98
	9							111	41	139	69	167	97	194	124	222	152	277	207	333	263	180	110
	10									126	49	154	77	181	104	209	132	264	187	320	243	200	123
	11											142	57	169	84	197	112	252	167	308	223	220	135
	12													157	64	185	92	240	147	296	203	240	147
RT140S	5	120.7	60	164.7	104	207.7	147	252	191	295	234	338	277									157	96.3
	6	101	29	145	73	188	116	232	160	275	203	318	246	362	290							188	116
	7			126	41	169	84	213	128	256	171	299	214	343	258	386	301					220	135
	8					150	53	194	97	237	140	280	183	324	227	367	270	454	357			251	154
	9							175	65	218	108	261	151	305	195	348	238	435	325	522	412	283	173
	10									198	77	241	120	285	164	328	207	415	294	502	381	314	193
	11											222	88	266	132	309	175	396	262	483	349	346	212
	12													247	101	290	144	377	231	464	318	377	231
RT160S	5	158	78	215	135	272	192	328	248	385	305	452	372									205	125
	6	133	37	190	94	247	151	303	207	360	264	427	331	473	377							246	150
	7			164	53	221	110	277	166	334	223	401	290	447	336	504	393					287	176
	8					197	69	253	125	310	182	377	249	423	295	480	352	593	465			328	200
	9							227	84	284	141	351	208	397	254	454	311	567	424	681	538	369	226
	10									259	100	326	167	372	213	429	270	542	383	656	497	410	251
	11											301	127	347	173	404	230	517	343	631	457	450	276
	12													322	131	379	188	492	301	606	415	492	301
RT210S	5	380	189	517	326	654	463	790	599	927	736	1064	873									494	303
	6	319	90	456	227	593	364	729	500	866	637	1003	774	1139	910							593	364
	7			396	128	533	265	669	401	806	538	943	675	1079	811	1216	948					692	424
	8					472	167	608	303	745	440	882	577	1018	713	1155	850	1428	1123			790	485
	9							548	203	685	340	822	477	958	613	1095	750	1368	1023	1642	1297	890	545
	10									624	241	761	378	897	514	1034	651	1307	924	1581	1198	989	606
	11											700	279	836	415	973	552	1246	825	1520	1099	1088	667
	12													776	317	913	454	1186	727	1460	1001	1186	727

ATC 120° /180° Double Acting Actuator

120°/180°Actuator Dimension and Connection Size (Double Acting)

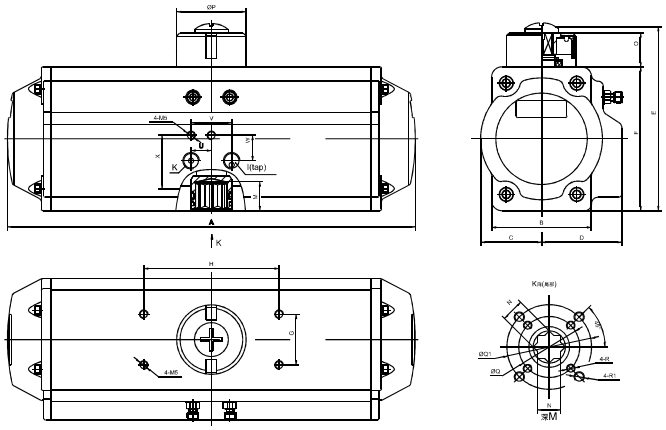

1.We can provide other item actuators according to your requirement
2.We can provide different stroke actuator ,such as 40°/60° etc

Dimension

Model	FLANGE L(ISO5211) Q/Q1	R/R1 M/N(min)	A(120)	A(180)	B	C	D	E	F	G	H	I	K	O	P	U	V	W	X
ATC-50	F03/F05	M5/M6	207	225	47	29	41.5	95	69	30	80	PF	1/4″	20	42	12	24	16	32
	Ø36/Ø50	13/11																	
ATC-63	F03/F05	M5/M6	230	250	59	36	47.5	111	85	30	80	PF	1/4″	20	42	12	24	16	32
	Ø36/Ø50	16/14																	
ATC-75	F05/F07	M6/M8	300	330	68	43	51	128	102	30	80	PF	1/4″	20	42	12	24	16	32
	Ø50/Ø70	19/17																	
ATC-88	F05/F07	M6/M8	325	358	68	49.5	55.5	141	115	30	80	PF	1/4″	20	42	12	24	16	32
	Ø50/Ø70	20/17																	
ATC-100	F07/F10	M8/M10	360	400	95	56	64	153	127	30	80	PF	1/4″	20	42	12	24	16	32
	Ø70/Ø102	24/22																	
ATC-115	F07/F10	M8/M10	420	465	97	64.5	74.5	181	145	30	80	PF	1/4″	30	62	12	24	16	32
	Ø70/Ø102	24/22																	
ATC-125	F07/F10	M8/M10	470	520	97	69	78.5	193	157	30	80	PF	1/4″	30	62	12	24	16	32
	Ø70/Ø102	29/27																	
ATC-145	F10/F12	M10/M12	525	580	115	80	87	214	178	30	80/130	PF	1/4″	30	62	12	24	16	32
	Ø102/Ø125	30/27																	
ATC-160	F10/F12	M10/M12	570	630	118	89	104	236	200	30	80/130	PF	1/4″	30	80	12	24	16	32
	Ø102/Ø125	30/27																	
ATC-190	F14	M16	655	720	130	103	103	267	231	30	80/130	PF	1/4″	30	80	12	24	16	32
	Ø140	40/36																	
ATC-210	F14	M16	770	840	130	113	113	293	257	30	130	PF	1/4″	30	80	12	24	16	32
	Ø140	40/36																	
ATC-240	F16	M20	840	916	160	130	130	328	292	30	130	PF	1/4″	30	80	12	24	16	32
	Ø165	50/46																	
ATC-270	F16	M20	940	1020	160	147	147	367	331	30	130	PF	1/2″	30	80	20	40	22.5	45
	Ø165	50/46																	
ATC-300	F16	M20	1140	1230	180	161	172	390	354	30	130	PF	1/2″	30	90	20	40	22.5	45
	Ø165	50/46																	

Three Position Pneumatic Actuator

Three position pneumatic actuators have two kinds of models 0° -45° -90° or 0° -90° -180° , In intake 2.the piston move to both ends after air inflow,it through both ends design has auxiliary piston produces mechanical constraints to realize the middle position It Can use outside ends adjusting bolt easily adjust intermediate position Angle directly Such as 20° 30° 50° 75° or 95° 120° 1 30° 1 50° 1 75° ,etc

Three position pneumatic actuators which operating need to design a set of electromagnetic valve control loop system to complete the operation, the control principle is as follows:

Air pressure enter 2 hole and D hole ate one time,then air from 4 hole and C hole eduction, 2 hole as internal piston movement, D hole through assisted piston push-rod limit internal piston positioning at a predetermined middle

Air pressure enter 2 hole and C hole at one time,then air from 4 hole and D hole eduction, 2 hole internal piston continues to move, C hole remove auxiliary piston push-rod limit positioning,it make the internal piston smooth arrival in full-open position.

Air pressure into 4 hole,then air from 2 hole eduction, internal piston move to the middle direction then reach full-closed position
We Can provide 0-45-90 spring return type specification,
When lose air,or cut power(or airfailure), it can return to full-closed position.through the spring force inner piston

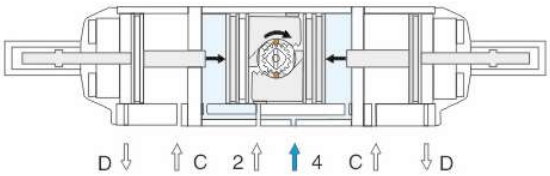

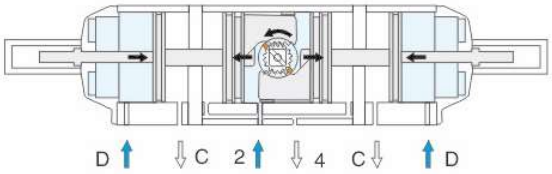

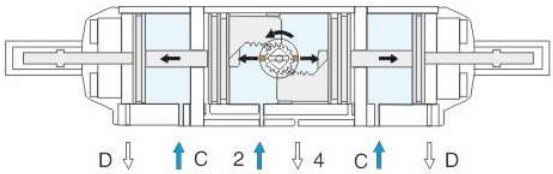

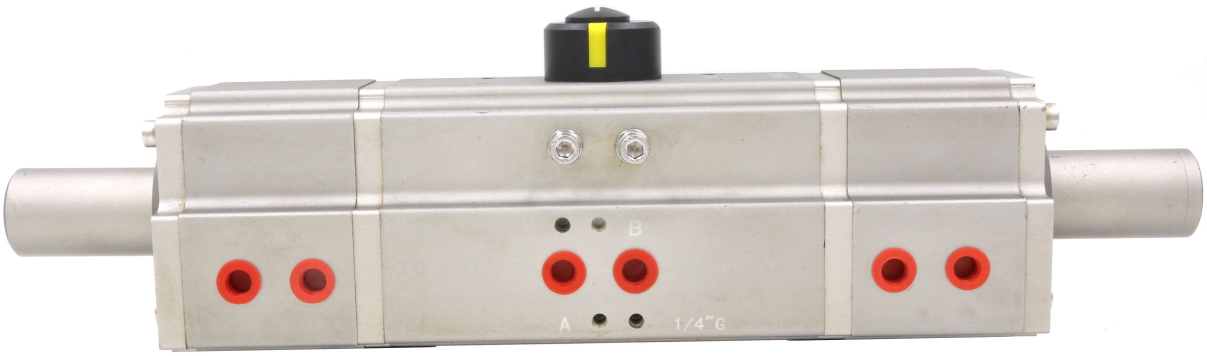

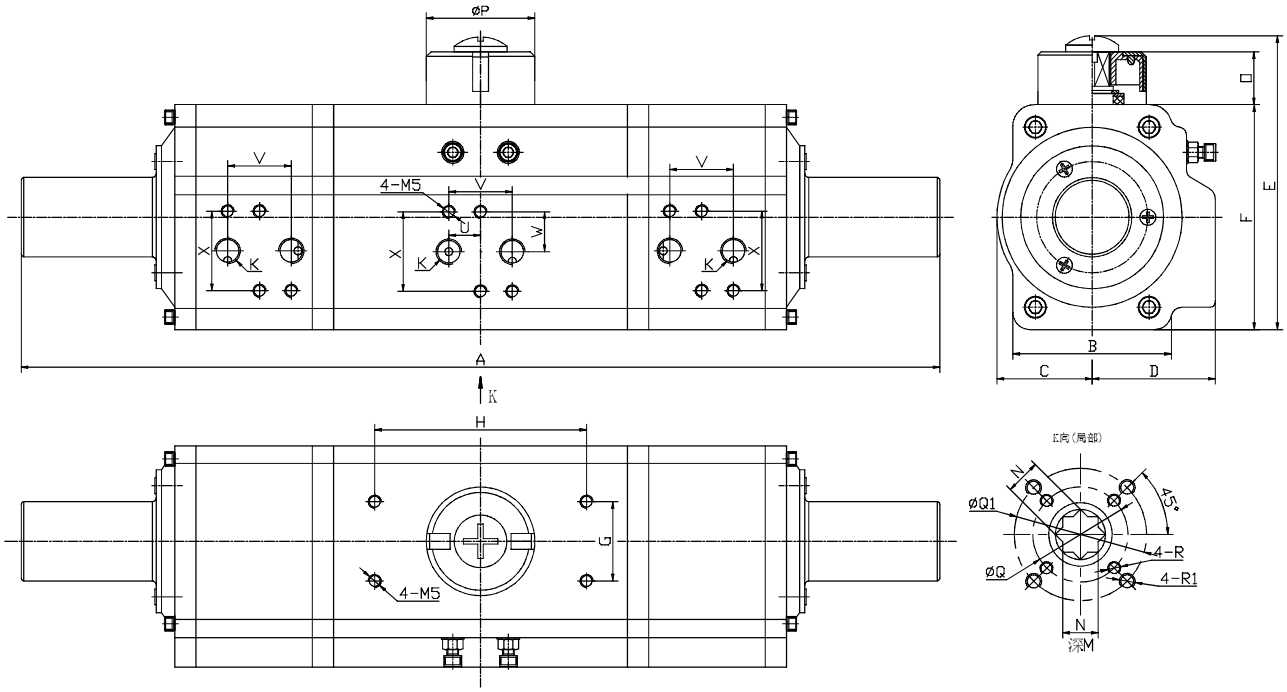

Dimension

Model	FLANGE L(ISO5211) Q/Q1	R/R1 M/N(min)	A	B	C	D	E	F	G	H	I	K	O	P	U	V	W	X
SAT-63	F03/F05 Ø36/Ø50	M5/M6 16/14	347	59	36	47.5	111	85	30	80	PF	1/4″	20	42	12	24	16	32
SAT-75	F05/F07 Ø50/Ø70	M6/M8 19/17	412	68	43	51	128	102	30	80	PF	1/4″	20	42	12	24	16	32
SAT-88	F05/F07 Ø50/Ø70	M6/M8 20/17	538	68	49.5	55.5	141	115	30	80	PF	1/4″	20	42	12	24	16	32
SAT-100	F07/F10 Ø70/Ø102	M8/M10 24/22	620	95	56	64	153	127	30	80	PF	1/4″	20	42	12	24	16	32
SAT-115	F07/F10 Ø70/Ø102	M8/M10 24/22	686	97	64.5	74.5	181	145	30	80	PF	1/4″	30	62	12	24	16	32
SAT-125	F07/F10 Ø70/Ø102	M8/M10 29/27	718	97	69	78.5	193	157	30	80	PF	1/4″	30	62	12	24	16	32
SAT-145	F10/F12 Ø102/Ø125	M10/M12 30/27	760	115	80	87	214	178	30	80/130	PF	1/4″	30	62	12	24	16	32
SAT-160	F10/F12 Ø102/Ø125	M10/M12 30/27	826	118	89	104	236	200	30	80/130	PF	1/4″	30	80	12	24	16	32
SAT-190	F14 Ø140	M16 40/36	892	130	103	103	267	231	30	80/130	PF	1/4″	30	80	12	24	16	32

메가텍 자동밸브

MEGATEC

서울사무소 : 서울시금천구 시흥대로97 19동202호
(시흥동, 시흥유통상가)

본사및 공장: 경기도 안산시 단원구 만해로205 B동505호
(성곡동, 타원타크라3차)

대 표 전 화 : 02-896-8800 , 팩스: 02-896-8883

이 메 일 : info@kst-korea.com

홈 페 이 지 : www.kst-korea.com